KOHLER® FAUCETS

TRITON®

BATHROOM SINK FAUCET
K-7437

ADA | **CSA B651** | **OBC**

Features

- *Brass valve bodies*
- *Brass construction*
- *Flexible connections for easy installation*
- *Quarter-turn washerless ceramic disc valves*
- *2.0 gallons (7.6 L) per minute flow rate [max at 60 psi (4.14 bar)]*
- *Pop-up drain with lift rod and tailpiece*
- *Available with standard or vandal-resistant Water-Guard® aerator*
- *Variety of handle style options*
- *5″ (127 mm) spout reach*

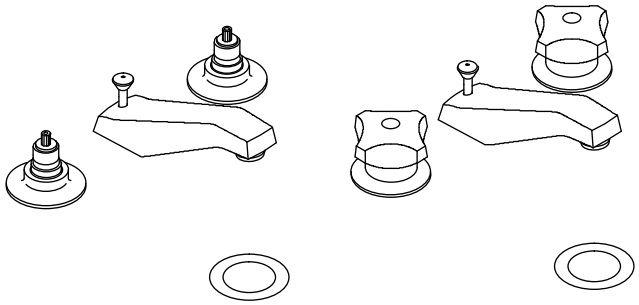

K-7437-K **K-7437-2A**

Codes/Standards Applicable

Specified model meets or exceeds the following:

- *ADA*
- *ICC/ANSI A117.1*
- *CSA B651*
- *OBC*
- *ASME A112.18.1/CSA B125.1*
- *Energy Policy Act of 2005*
- *NSF 61*
- *All applicable US Federal and State material regulations*

Colors/Finishes

- CP: Polished Chrome
- PB: Vibrant® Polished Brass

Accessories

- CP: Polished Chrome
- NA: None applicable

Specified Model

Model	Description	Colors/Finishes	
K-7437-K	Triton base faucet with standard aerator but without handles	❑ CP	❑ PB
K-7437-2A	Triton complete faucet with standard handles and aerator	❑ CP	

Product Specification

Two-handle widespread bathroom sink faucet shall be of brass construction. Faucet shall feature brass valve bodies. Faucet shall feature quarter-turn washerless ceramic disc valves, assuring positive handle stop positioning. Product shall include flexible connections, 5″ (127 mm) spout, and pop-up drain with lift rod and tailpiece. Optional feature shall be standard or vandal-resistant Water-Guard® aerator. Base faucet shall be Kohler Model K-7437-_____-_____ and handles shall be Kohler Model K-16012-_____-CP OR complete faucet shall be Kohler Model K-7437-2A-CP.

USA/Canada: 1-800-4KOHLER
(1-800-456-4537)
www.kohler.com

TRITON®

Required Accessories (Includes Two Handles)			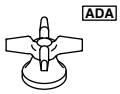 ADA	ADA	ADA CSA B651 OBC
K-16012-2	Triton standard handles **OR**	❑ CP			
K-16012-3	Triton cross handles **OR**		❑ CP		
K-16012-4	Triton lever handles **OR**			❑ CP	
K-16012-5	Triton wristblade lever handles				❑ CP

Optional Accessories		
1160594	Large Spray 0.35 gpm (1.32 lpm) – Insert only	❑ NA
_____	Additional flow options are available (refer to the Price Book)	❑ NA

Installation Notes

Install this product according to the installation guide.

ADA, CSA B651, OBC compliant when installed to the specific requirements of these regulations.

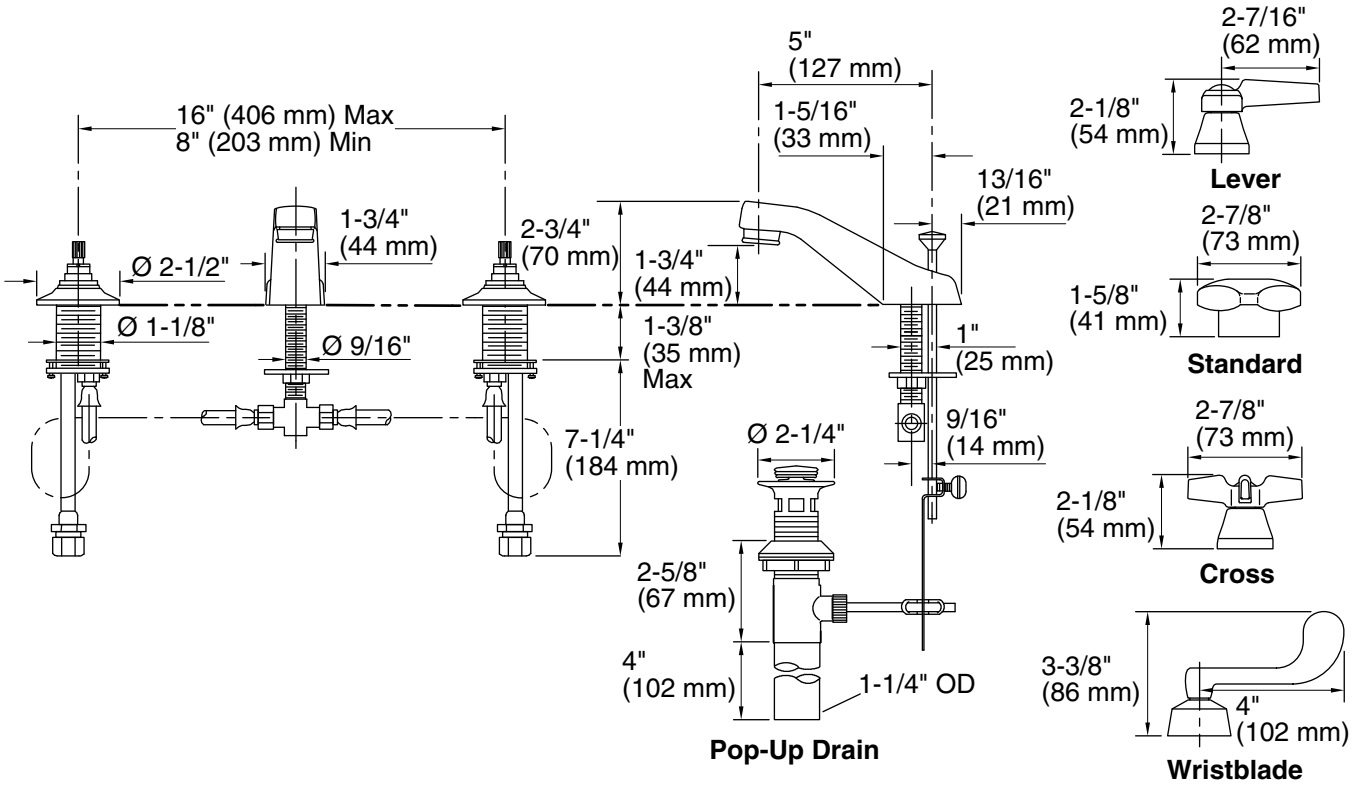

Product Diagram

THE BOLD LOOK OF KOHLER®